Confidence in testing.

Reditest® RediCup®

substance abuse screening device

Product Training
Presentation

REDWOOD TOXICOLOGY LABORATORY™

an inverness medical company

The information in this presentation is a general overview on using the Reditest® RediCup® substance abuse screening device.

Product Training Contents:

- RediCup® overview
- Collection procedure
- Testing procedure
- Reading results
- Sending presumptive positives for confirmation

RediCup® technical information

It is important to read the package insert before using the RediCup® screening device.

Screening Results:
The RediCup® is used for **Screening Only**. Positive results obtained with this device are presumptive.

Additional testing is necessary to **confirm** the presumptive positive results. Positive results should be "confirmed" by an **alternate method such as GC/MS** (Gas Chromatography/Mass Spectrometry).

Professional judgment should be applied to any drug of abuse test result, particularly with preliminary positive results.

The RediCup screening device is a rapid, one step screening test for the simultaneous, qualitative detection of multiple drugs and drug metabolites in human urine. For in vitro diagnostic use only.

Product overview

REDWOOD TOXICOLOGY LABORATORY™

an inverness medical company

RediCup® product overview

FEATURES & BENEFITS

- Available tests include: *AMP, M-AMP, BAR, BZO, COC, MDMA, MTD, OPI, OXY, PCP, TCA, and THC
- Self contained cup minimizes collector exposure to urine
- Performance comparable to laboratory screening methods
- Results in 5 minutes
- Flexible 4, 5, 6 and 10 drug combinations
- FDA – 510(k) cleared to market
- NIDA 5 cut-off levels meet SAMHSA guidelines

* See page 8 for abbreviations and cut-off levels

RediCup® components

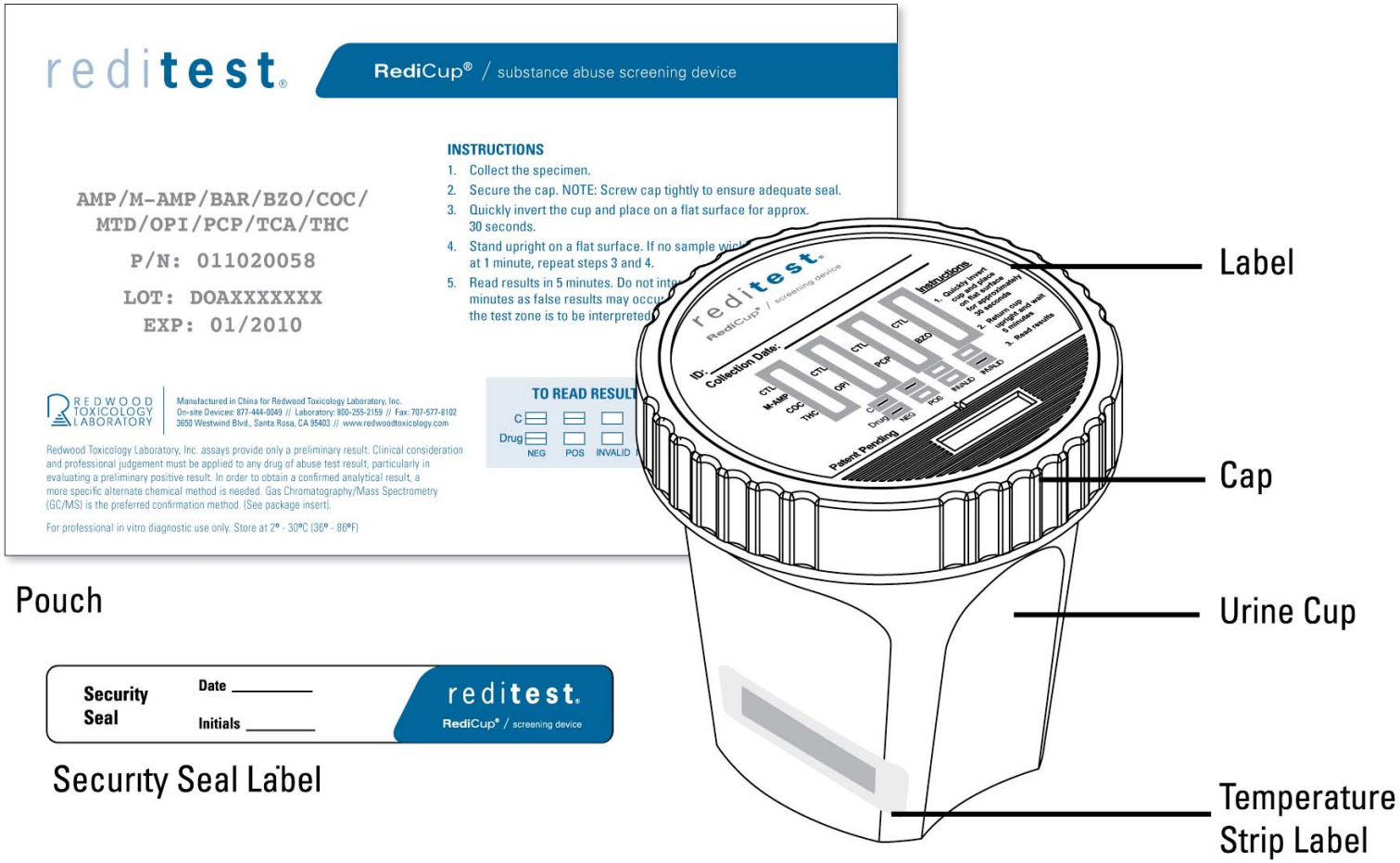

RediCup® foil pouch

The foil pouch contains the following information: list of drugs (abbreviations*) screened, part number, lot number and expiration date.

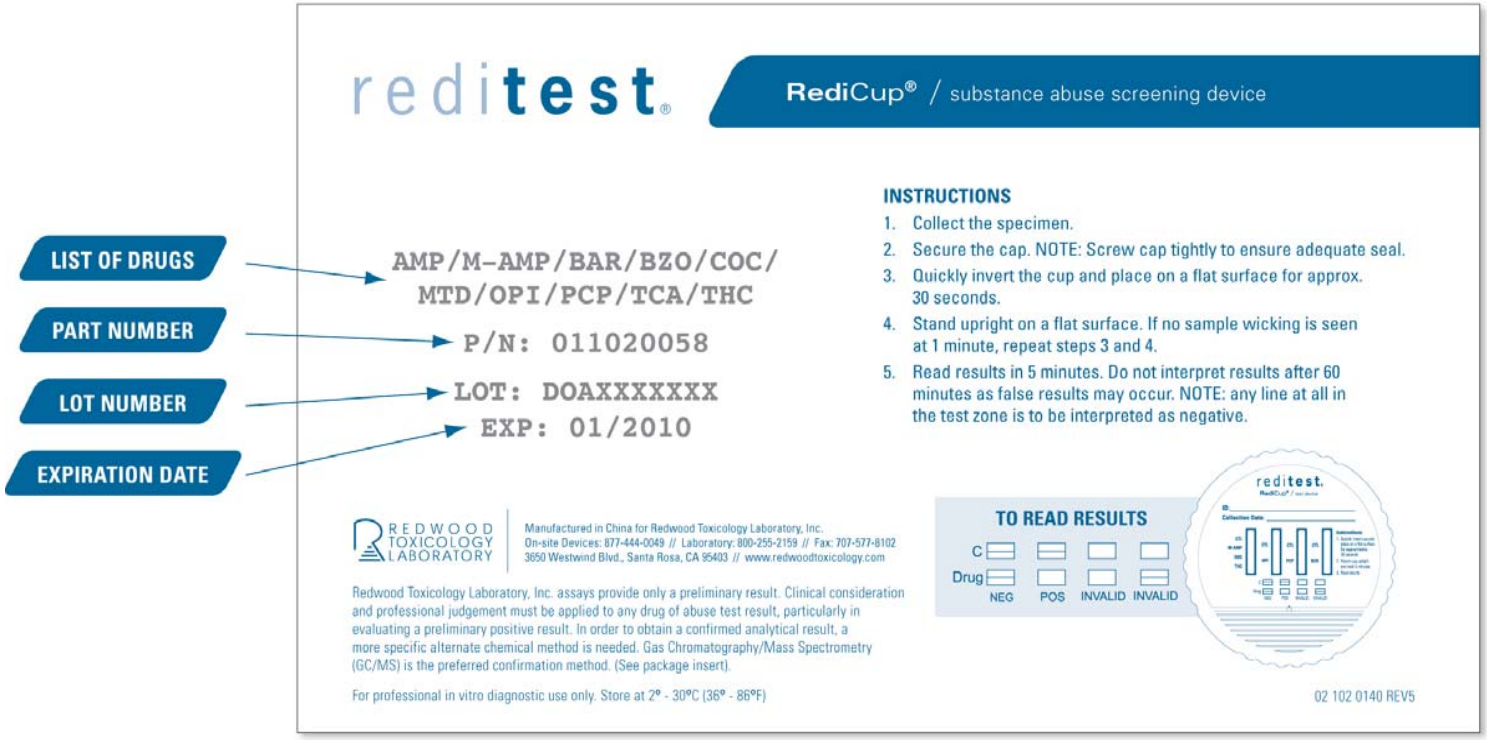

* See page 8 for abbreviations

RediCup® cut-off levels

DRUG	TARGET DRUG	CUT-OFF
Amphetamine (AMP)	D-Amphetamine	*1,000 ng/mL
Barbiturates (BAR)	Secobarbital	300 ng/mL
Benzodiazepines (BZO)	Oxazepam	300 ng/mL
Cocaine (COC)	Benzoylecgonine	*300 ng/mL
Marijuana (THC)	11-nor-Δ9-THC-9 COOH	*50 ng/mL
Methadone (MTD)	Methadone	300 ng/mL
Methylenedioxymeth-amphetamine (MDMA)	D,L Methlenedioxy-methamphetamine	500 ng/mL
Methamphetamine (M-AMP)	D-Methamphetamine	1,000 ng/mL
Opiates		
OPI 300	Morphine	300 ng/mL
OPI 2000	Morphine	2,000 ng/mL
Oxycodone (OXY)	Oxycodone	100 ng/mL
Phencyclidine (PCP)	Phencyclidine	*25 ng/mL
Tricyclic Antidepressants (TCA)	Nortriptyline	1,000 ng/mL

* Meets SAMHSA cut-off levels.

Collection procedure

REDWOOD TOXICOLOGY LABORATORY™

an inverness medical company

Collect urine specimen

Collect urine specimen in the collection cup.

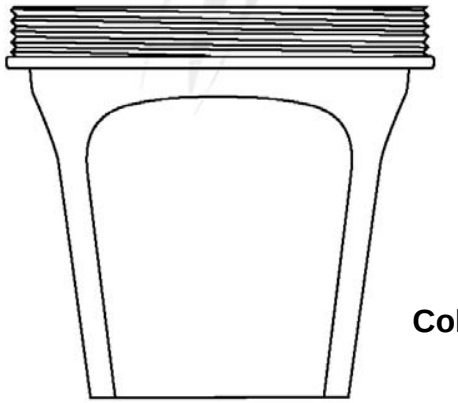

Collection cup

Fill the cup to at least **1/3 full.** This helps ensure proper specimen volume for initial test and possible confirmation tests.

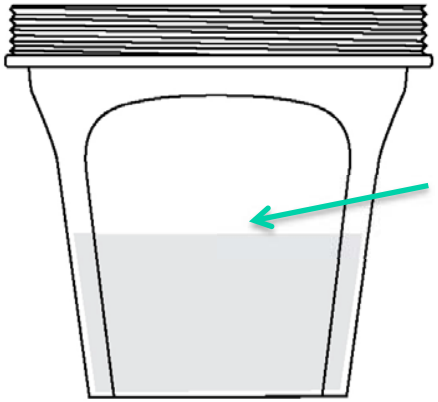

Fill at least 1/3 full

Testing procedure

REDWOOD TOXICOLOGY LABORATORY™

an inverness medical company

Testing procedure

Open the foil pouch and remove the RediCup® Cap.

NOTE: *The desiccant pouches are part of the packaging, they are not a part of the screening device.*

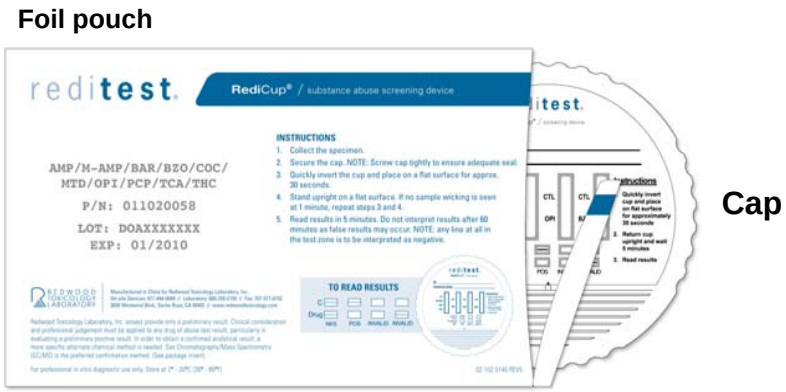

Write the donor's ID on top of the device cap.

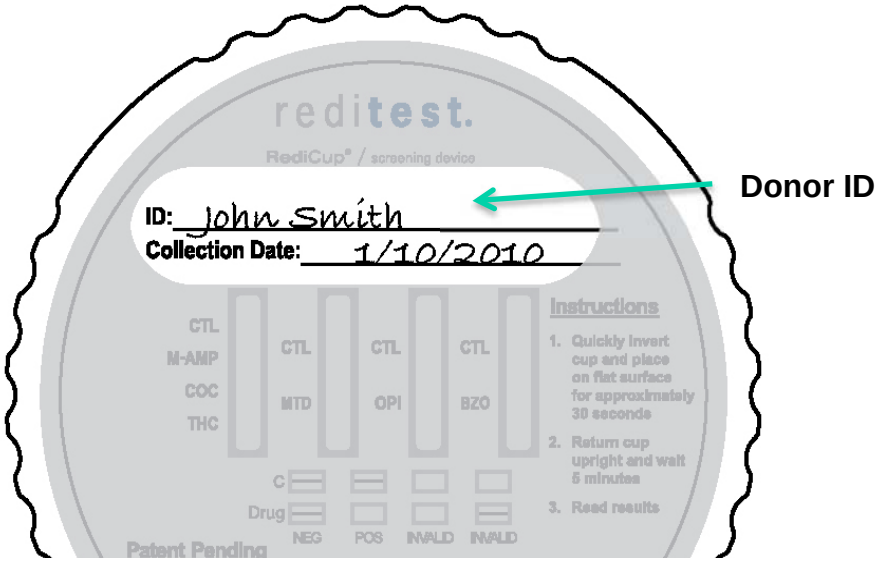

Testing procedure

Secure the RediCup® cap on the collection cup.

To prevent leakage, make sure the lid is threaded properly and tightly fastened.

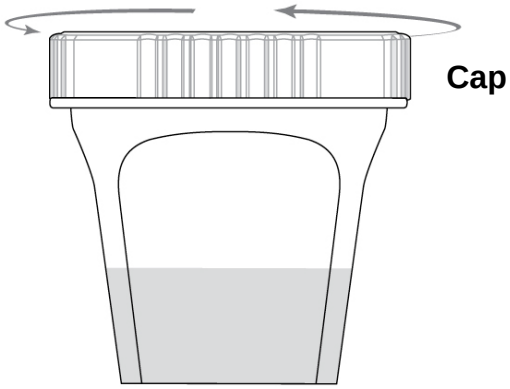

Testing procedure *Continued*

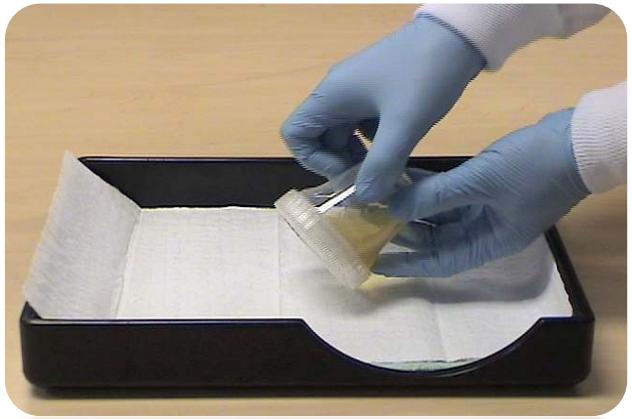

Quickly turn the cup upside-down and **flip toward** the wetting window.

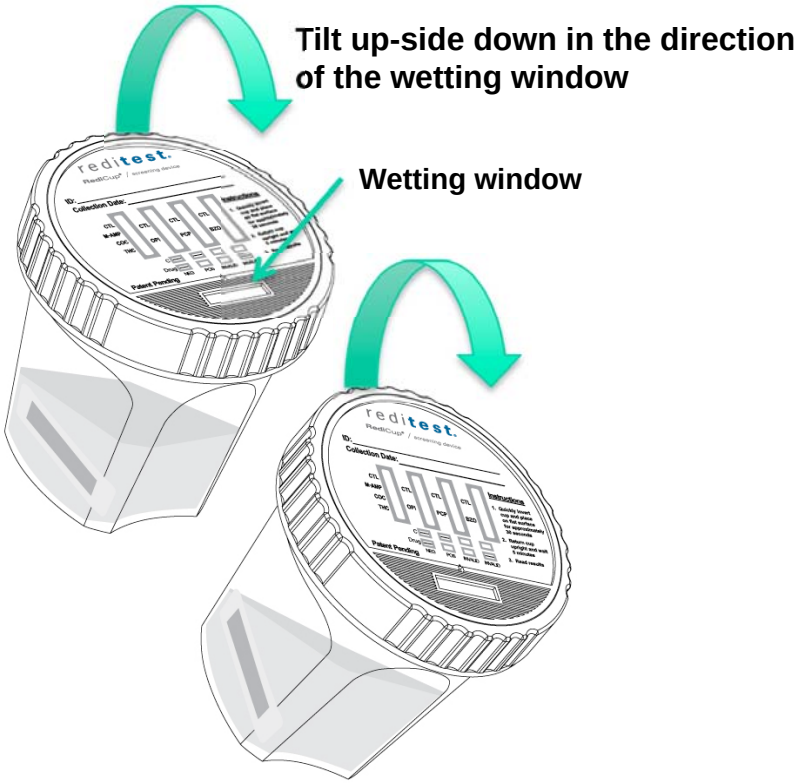

REDWOOD TOXICOLOGY LABORATORY™
an inverness medical company

Testing procedure *Continued*

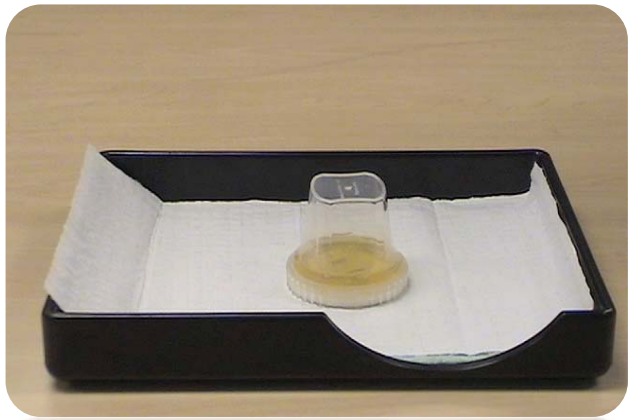

Place on a **flat surface** for approximately **30 seconds**.

NOTE: *It is important not to tap, tilt, swirl or shake the cup during this part of the procedure.*

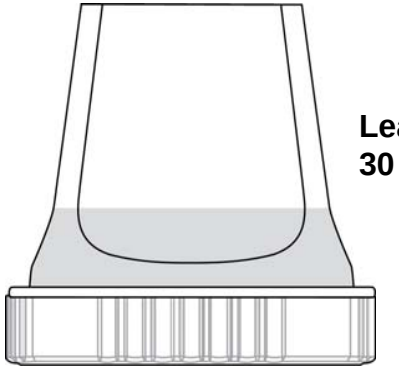

Leave for 30 seconds

Test procedure *Continued*

After 30 seconds – stand cup upright on a flat surface.

Return cup upright and wait 5 minutes.

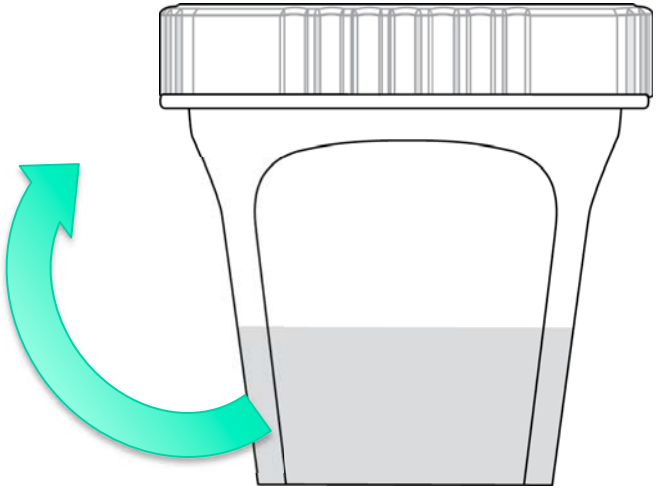

If wicking is not seen at **1 minute**, turn the cup over for an additional 30 seconds. This process can be repeated until wicking is seen.

Reading results

REDWOOD TOXICOLOGY LABORATORY™

an inverness medical company

Reading results

Read results in **5 Minutes.** Do not interpret results after 60 minutes as false results may occur.

Control line

Test zones

Look for red lines in the control zone and the test zone.

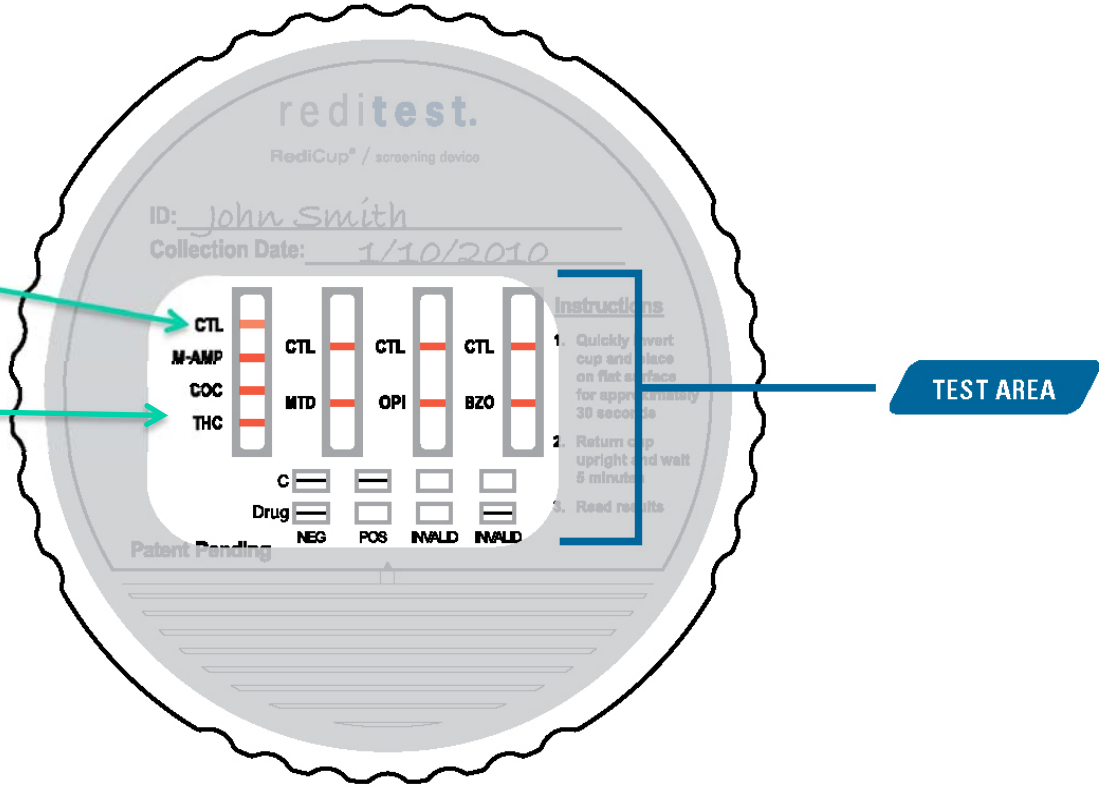

RediCup Cap

Result interpretation

NEGATIVE

The control line must be red to indicate the test is valid. Any visible line, even a faint line, indicates a negative result.

NEGATIVE RESULT

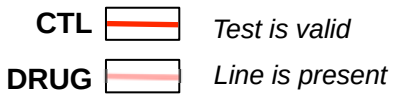

POSITIVE

The control line must be red to indicate the test is valid. The test area must be snow white to be considered positive.

POSITIVE RESULT

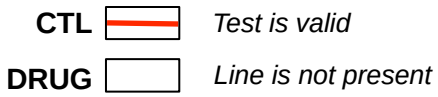

INVALID

When there is no line in the control line area, the result is invalid. If an invalid result is obtained repeat the test using a new test device.

INVALID RESULT

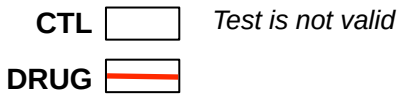

If the problem persists, contact RTL Client Services at:
(800) 255-2159, ext. 4399

Reading results

Negative Example

NEGATIVE = line is present

Any visible line, even a faint line, indicates a negative result.

Reading results

Presumptive Positive Example

POSITIVE = line is not present

Presumptive positive for cocaine (no line is present).

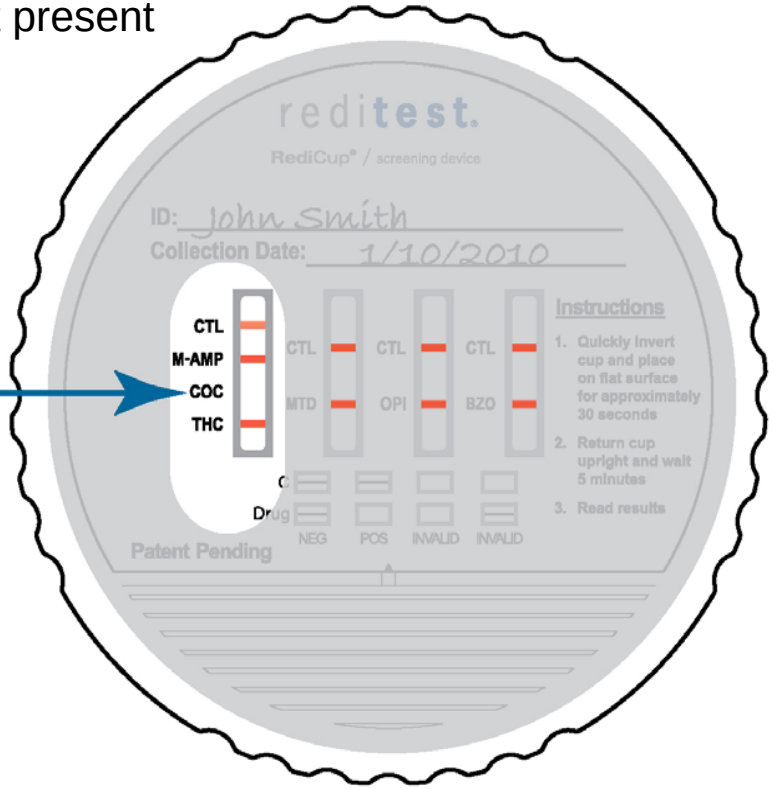

Logging on-site test results

Use a **Preliminary Result Form** to log on-site drug test results. Printed forms are available by request. A PDF form can also be downloaded from our website at: www.redwoodtoxicology.com/documents/products/urine-prelim_result_form.pdf

Forms are for your internal use. These forms are not lab test request forms (for further confirmation testing). Please use the Lab Test Requisition Forms provided by your laboratory for confirmation testing.

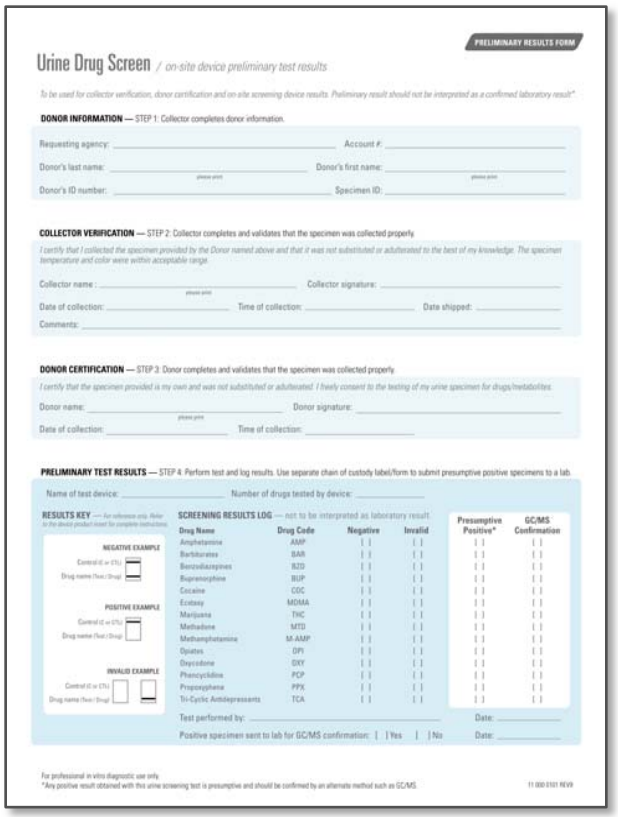

PRELIMINARY RESULTS FORM

Urine Drug Screen / on-site device preliminary test results

To be used for collector verification, donor certification and on-site screening device results. Preliminary result should not be interpreted as a confirmed laboratory result*

DONOR INFORMATION — STEP 1: Collector completes donor information.

Requesting agency: _____ Account #: _____

Donor's last name: _____ (please print) Donor's first name: _____ (please print)

Donor's ID number: _____ Specimen ID: _____

COLLECTOR VERIFICATION — STEP 2: Collector completes and validates that the specimen was collected properly.

I certify that I collected the specimen provided by the Donor named above and that it was not substituted or adulterated to the best of my knowledge. The specimen temperature and color were within acceptable range.

Collector name: _____ (please print) Collector signature: _____

Date of collection: _____ Time of collection: _____ Date shipped: _____

Comments: _____

DONOR CERTIFICATION — STEP 3: Donor completes and validates that the specimen was collected properly.

I certify that the specimen provided is my own and was not substituted or adulterated. I freely consent to the testing of my urine specimen for drugs/metabolites.

Donor name: _____ (please print) Donor signature: _____

Date of collection: _____ Time of collection: _____

PRELIMINARY TEST RESULTS — STEP 4: Perform test and log results. Use separate chain of custody label/form to submit presumptive positive specimens to a lab.

Name of test device: _____ Number of drugs tested by device: _____

RESULTS KEY — For reference only. Refer to the device product insert for complete instructions.

NEGATIVE EXAMPLE

Control (C or CTL) ☐

Drug name (Test / Drug) ☐

POSITIVE EXAMPLE

Control (C or CTL) ☐

Drug name (Test / Drug) ☐

INVALID EXAMPLE

Control (C or CTL) ☐ ☐

Drug name (Test / Drug)

SCREENING RESULTS LOG — not to be interpreted as laboratory result

Drug Name	Drug Code	Negative	Invalid	Presumptive Positive*	GC/MS Confirmation
Amphetamine	AMP	( )	( )	( )	( )
Barbiturates	BAR	( )	( )	( )	( )
Benzodiazepines	BZD	( )	( )	( )	( )
Buprenorphine	BUP	( )	( )	( )	( )
Cocaine	COC	( )	( )	( )	( )
Ecstasy	MDMA	( )	( )	( )	( )
Marijuana	THC	( )	( )	( )	( )
Methadone	MTD	( )	( )	( )	( )
Methamphetamine	M-AMP	( )	( )	( )	( )
Opiates	OPI	( )	( )	( )	( )
Oxycodone	OXY	( )	( )	( )	( )
Phencyclidine	PCP	( )	( )	( )	( )
Propoxyphene	PPX	( )	( )	( )	( )
Tri-Cyclic Antidepressants	TCA	( )	( )	( )	( )

Test performed by: _____ Date: _____

Positive specimen sent to lab for GC/MS confirmation: [ ] Yes [ ] No Date: _____

For professional in vitro diagnostic use only.

*Any positive result obtained with this urine screening test is presumptive and should be confirmed by an alternate method such as GC/MS.

11 000 0101 REV0

Redwood Toxicology Laboratory provides confirmation testing for many Reditest® on-site screening devices.

For more information about this service, call (800) 255-2159.

Shipping specimens to the laboratory

REDWOOD TOXICOLOGY LABORATORY™

an inverness medical company

Shipping specimens

For instruction on how to send presumptive positive specimens to the lab, please view the next document in the training series: **"Specimen Labeling & Shipping"**.

View online here:
www.redwoodtoxicology.com/resources/documents/labeling_shipping.pdf

If you have additional questions about your device please contact
a Sales or Client Services representative:

Redwood Toxicology Laboratory, Inc.
Reditest® Screening Devices
3650 Westwind Blvd.
Santa Rosa, CA 95403
www.redwoodtoxicology.com
Sales Inquiries **(800) 255-2159** or 877-444-0049
Client Services **(800) 255-2159, ext. 4399** or 707-577-7959, ext. 4339

Confidence in testing.

Thank you for your time.

REDWOOD TOXICOLOGY LABORATORY™

an inverness medical company